UNITY | TBX

2027 MANUAL



LEISURE
TRAVEL VANS

⚠ WARNING

Operating, servicing and maintaining a passenger vehicle, pickup truck, van, or off-highway motor vehicle can expose you to chemicals including engine exhaust, carbon monoxide, phthalates, and lead, which are known to the State of California to cause cancer and birth defects or other reproductive harm. To minimize exposure, avoid breathing exhaust, do not idle the engine except as necessary, service your vehicle in a well-ventilated area and wear gloves or wash your hands frequently when servicing your vehicle.
For more information go to www.P65Warnings.ca.gov/passenger-vehicle

TABLE OF CONTENTS

1. INTRODUCTION
- Supplemental Manual....1-1
- Motorhome Information Kit....1-2
- Options and Equipment....1-2
- Service Assistance....1-2
- Reporting Safety Defects....1-3

2. GENERAL INFORMATION
- Floor Plan....2-1
- Exterior Equipment Location....2-2
- Beds and Seating....2-4
  - U24TBX Sleeping....2-4
  - U24TBX DINETTE Seating....2-4
  - Front Dinette....2-5
  - Front Bed....2-5
- Countertop extension....2-6
- TV Location....2-7

3. SCHEMATICS
- Electrical....3-1
  - 12 volt Electrical Reference....3-1
  - 120 Volt Electrical Reference....3-2
  - Electrical Schematic....3-3
- Plumbing....3-8
  - Water lines schematic....3-8
  - Drain line schematic....3-9
- Entertainment....3-10
- Satellite Pre-wire....3-11

1. INTRODUCTION

Congratulations! Thank you for selecting a Leisure Travel Vans Motorhome.

Welcome to the exciting world of motorhome travel and camping, with all the comforts of home with you, while you travel and enjoy the outdoors.

Your motorhome has been designed and manufactured to enhance your travel and camping experience and to provide you with safe, efficient and trouble-free operation.

Before your first drive, become familiar with the operation of the vehicle chassis and all functions and operations of the motorhome. Spend adequate time with your dealer when you take delivery to learn all you can about your new motorhome.

KEEP the Motorhome Information Kit within your motorhome for readily available reference.

PASS this manual, the Chassis Operation Manual and the Motorhome Information Kit to any subsequent operator or owner.

For clarification or further details on any of the enclosed information, please contact:

Your Leisure Travel Vans Dealer or Triple E RV Customer Service at:

Email:	info@tripleerv.com
Toll Free:	877-992-9906
Telephone:	204-325-4361
Fax:	204-325-5241

SUPPLEMENTAL MANUAL

This manual was prepared to aid the operator and occupants in the operation and care of the motorhome by giving specific information about your model. There are many options to Leisure Travel Vans, so ensure that you are familiar with your motorhome's systems and equipment. All operators and occupants of the motorhome should read, understand and follow the instructions in this manual, the vehicle chassis manual & the information contained in the Motorhome Information Kit provided with your new motorhome.

Your motorhome contains a number of systems, components, equipment, and appliances manufactured by vendors that supply components for Triple E RV. These vendors are unrelated to Triple E RV.

Before operating the motorhome for the first time – even if an experienced motorhome operator – read and become familiar with all of the relevant manuals to your motorhome, components, equipment and appliances provided in the Motorhome Information Kit. Your familiarity with the detailed operation of your motorhome will assist in your safe, efficient and trouble-free motorhome operation.

MOTORHOME INFORMATION KIT

The Motorhome Information Kit includes but isn't limited to information on the components, equipment and appliances listed below (based on options selected).

- Refrigerator
- Stove top
- Furnace
- Electrical Panel
- Toilet
- Water Heater
- Water Pump
- Water Filtration
- Vent (roof)
- Fire Extinguisher
- Smoke Detector
- Thermostat
- CO Detector
- Propane Detector
- Gas Regulator
- TV Antenna
- TV/DVD
- Chassis
- Air Conditioner
- Generator
- Stabilizers/Leveling Jacks
- Rear View Monitor
- Inverter
- Entertainment System
- Safety
- Flooring and Countertops
- Electric Step
- Solar Panel
- Surge Protector
- Safe
- Awning

OPTIONS AND EQUIPMENT

Leisure Travel Vans are available in various sizes and floor plan configurations and with differing optional equipment. The equipment, accessories and components described in this manual may not apply in all respects to your motorhome. Read the material and manuals provided in the Motorhome Information Kit for detailed instructions regarding the equipment specific to your motorhome.

SERVICE ASSISTANCE

Your dealer will assist you with any additional information you need and will answer any questions you have about the operation of your motorhome. When it's time to service the vehicle, remember that your dealer knows your motorhome best and is dedicated to your satisfaction. Your dealer will provide quality maintenance and assistance during your period ownership. Triple E RV strongly recommends that you follow a regular maintenance schedule to keep your motorhome functioning at its best.

Call the following numbers if you require warranty assistance while traveling:

Triple E RV: 1-877-992-9906

Canada Sprinter Customer Service:
1-800-387-0100 www.thesprinter.ca

US Sprinter Customer Service:
1-877-762-8267 www.mbsprinterusa.com

Canada Ford Customer Service:
1-800-565-3673 www.ford.ca

US Ford Customer Service:
1-800-392-3673 www.ford.com

Emergency Roadside Service* Call:
1-877-219-3831
4287 Beltline Road, Box 198
Addison, Texas 75001

*This Emergency Roadside Service is available to owner of the motorhome during the first two years after purchase.

REPORTING SAFETY DEFECTS

If you suspect your motorhome has a safety defect that could cause injury or death, immediately contact Triple E RV. Also, contact the National Highway Traffic Safety Administration (NHTSA) in the US or Transport Canada to report your concern.

NHTSA will investigate the concern if there are a number of similar complaints. NHTSA has the authority to order a recall and repair campaign depending on the nature and severity of the problem.

You can reach the NHTSA by calling the Auto Safety Hot-line at 1-800-424-9393 (202-366-0123 in the Washington, DC, area) or by writing to NHTSA, US Department of Transportation, Washington, DC 20590. The hot-line also will provide you with additional information on motor vehicle safety.

In Canada, call 1-800-333-0510 or write to Transport Canada and Road Safety, 2780 Sheffield Road, Ottawa, Ontario K1B 3V9.

2. GENERAL INFORMATION

FLOOR PLAN

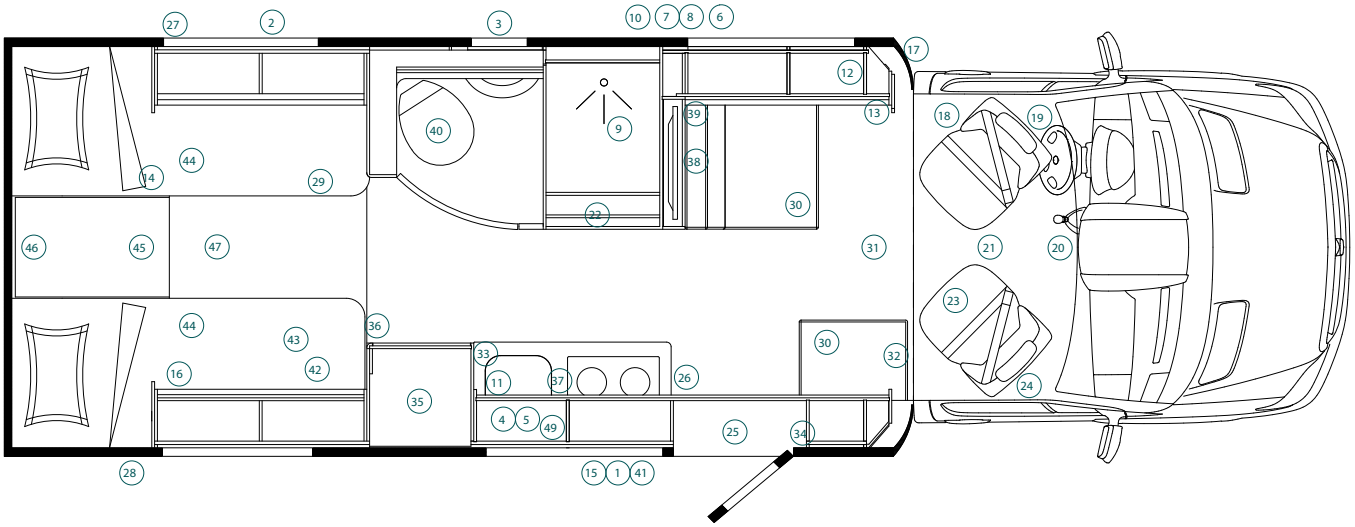

① Coach Batteries In Compartment Under Floor (Solar Panel Controller and 30A fuse behind batteries)
② Egress Window
③ Shore Power Plug
④ Water Heater Under Galley
④ Water Pump Under Galley
⑤ Tank Flush Non Return Valve Behind Access Cover under Wardrobe
⑥ Utility Center Under Floor
⑦ Macerator Option Under Floor
⑧ Shower
⑨ Sewer Hose Under Floor
⑩ Water Filter Under Galley
⑪ Satellite Option Prewire and Component Connection Plate in Overhead Cabinet
⑫ TV Antenna Booster Switch under Overhead
⑬ Surge Protector/Transfer Switch Under Bed driver side
⑭ Step Switch, battery heat, G12 RTC, Battery hub shared 5A fuse in Battery compartment
⑮ Wardrobe
⑯ USB Plug on Cab Upright
⑰ Battery Power and Ignition Fuses under Driver Seat
⑱ Chassis Battery Under Cab Floor 60Amp Fuse Location
⑲ 12 Volt Plug and USB Plug
⑳ Swivel Seats
㉑ Pantry
㉒ DC/DC Charger under seat
㉓ Awning Switches Under Passenger Seat
㉔ Water Heater/Furnace Control above Entrance Door
㉕ Battery Disconnect Switch on Cabinet Wall
㉖ Generator Option Under Floor
㉗ Exterior BBQ Connection Under Floor
㉘ Breaker Panel
㉙ Dinette
㉚ Smoke Alarm on Ceiling
㉛ MultiPlex Display
㉜ Thermostat Sensor
㉝ Fire Extinguisher
㉞ Fridge Below and Microwave Above
㉟ Propane/Carbon Monoxide Detector on Dinette Side
㊱ Galley
㊲ TV
㊳ MultiPlex G12 Panel Board behind Access cover
㊴ Toilet
㊵ Inverter In Compartment Under Floor
㊶ Water Tank Under Bed
㊷ Water Tank Drain Under Bed
㊸ Bed
㊹ Propane Tank Under Floor
㊺ USB Plug
㊻ Furnace
㊼ Battery Storage Switch in Battery compartmnet

EXTERIOR EQUIPMENT LOCATION

PASSENGER SIDE VIEW

1. Light
2. Inverter and Battery Compartment
3. External Receptacle
4. BBQ Hook-Up
5. Storage Compartment
6. Awning
7. Entrance Step
8. Ladder (Optional)
9. Water Heater

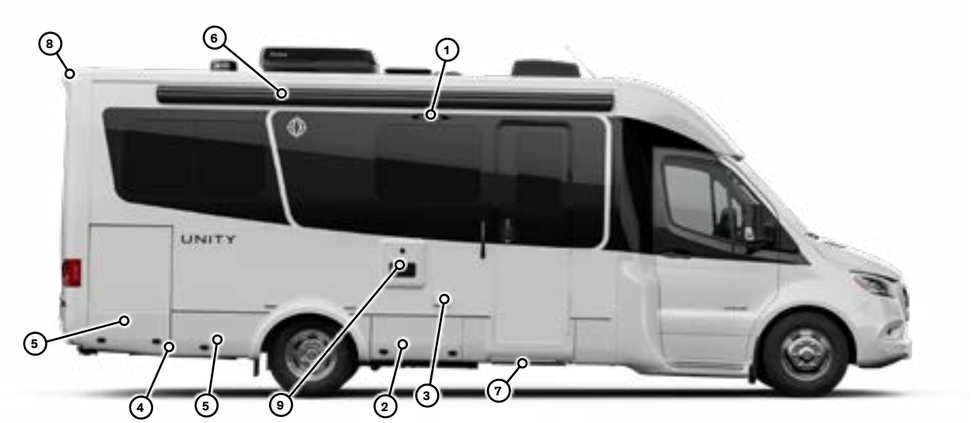

DRIVER SIDE VIEW

1. Sewer Hose (Behind Doors)
2. Diesel Fill
3. Storage Compartment
4. Utility Center
5. Shore Power Connection
6. Sewer Termination
7. Generator Compartment
8. Furnace Exhaust

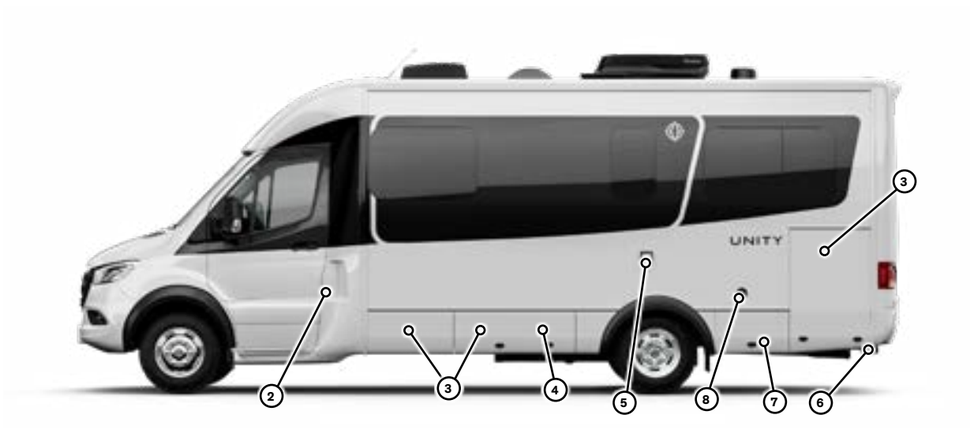

TOP VIEW

1. Solar Panels (Optional)
2. Roof Vent
3. Skylight
4. Stack Vent
5. Starlink Satellite (Optional)
6. A/C
7. TV Antenna

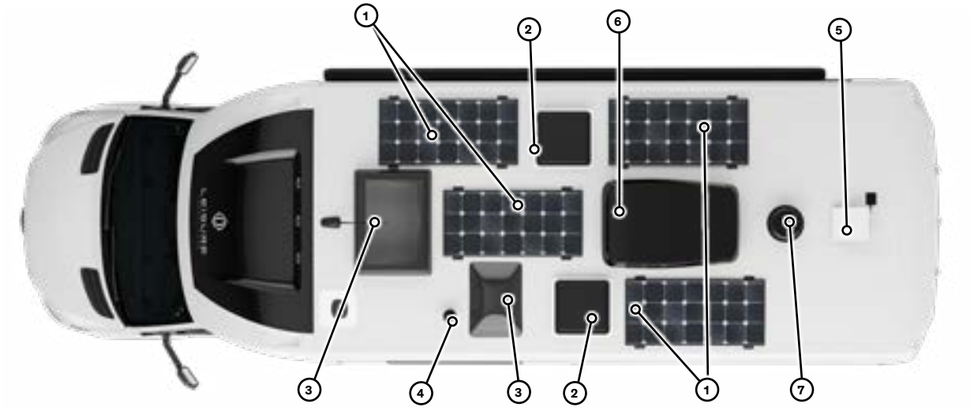

BEDS AND SEATING

U24TBX SLEEPING

TWIN BED CONVERSION

1. Fold out the cushion support (7).





2. Insert the two cushions (8), stored below the bed cabinet.



U24TBX DINETTE SEATING

INSTALLING THE REMOVABLE TABLE ASSEMBLY

1. Locate the table leg and table top stored in the cabinet across the galley (9).

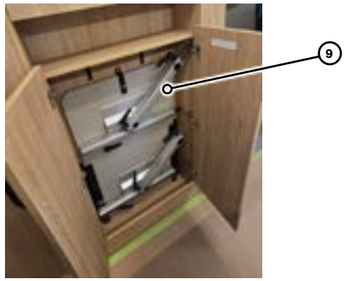

2. Loosen handles on supports to allow movement.
3. Remove bottom table support from the bracket on the table and slide it in to the groove on dinette bracket (10). Tighten handle to secure support in place.



4. Place table support on to the peg at the top of the support (11). Adjust the position and rotation of the table to your liking, and tighten handles to secure in place.



5. A second table can be set up either on the passenger side dinette, or in the rear of the coach following the same instructions (12).

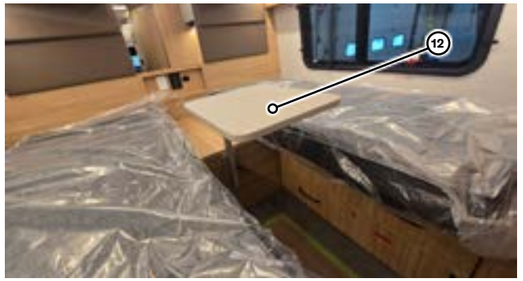

FRONT DINETTE

CONVERTING FROM TRAVEL POSITION TO DINETTE:

1. Slide the locking mechanism to the right to unlock the swivel mechanism and hold.



2. Using the strap, swing the end of the benc outwards until the dinette is fully extended.

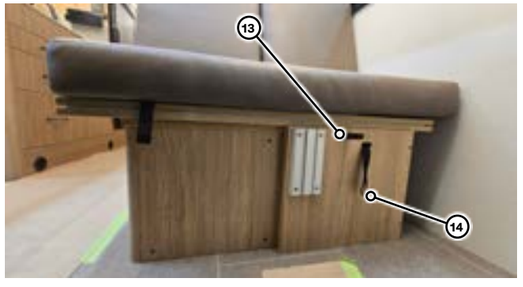

CONVERTING FROM DINETTE TO TRAVEL POSITION:

1. While holding the strap on the left side of the dinette bench, slowly push the right side backwards to begin swivelling the seat.



2. Continue rotating the seat back in to travel position until it locks in to place.

⚠ CAUTION

Do not use the seats while in motion if the seat has not been locked in to position. Failure to do so may cause injury or harm.

FRONT BED

SETTING UP THE BASE FOR THE UNITY TBX:

1. Swivel out the drivers side dinette (17).



2. Remove the driver and passenger side dinette cushions and swing out the passenger Side dinette base (18).



3. Fold out the lid from the drivers side dinette (19) to lay flat on the passenger side.

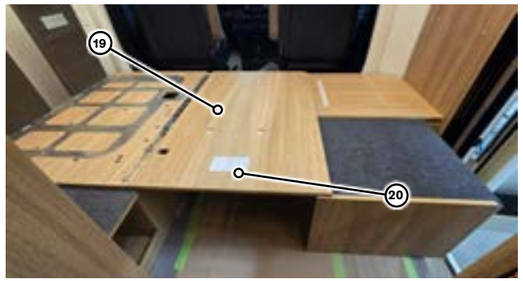

4. Lay the cushions back on the platform, following the diagram located on the flip out lid (20).



COUNTERTOP EXTENSION

1. Retrieve the countertop extension top from its storage compartment underneath the sink (21).



2. Slide out the countertop extension support (22).



3. Place the countertop extension top in position on the support (23).



TV LOCATION

The Unity TBX is equipped with a single TV located in the front dinette area.



3. SCHEMATICS

ELECTRICAL

12 VOLT ELECTRICAL REFERENCE

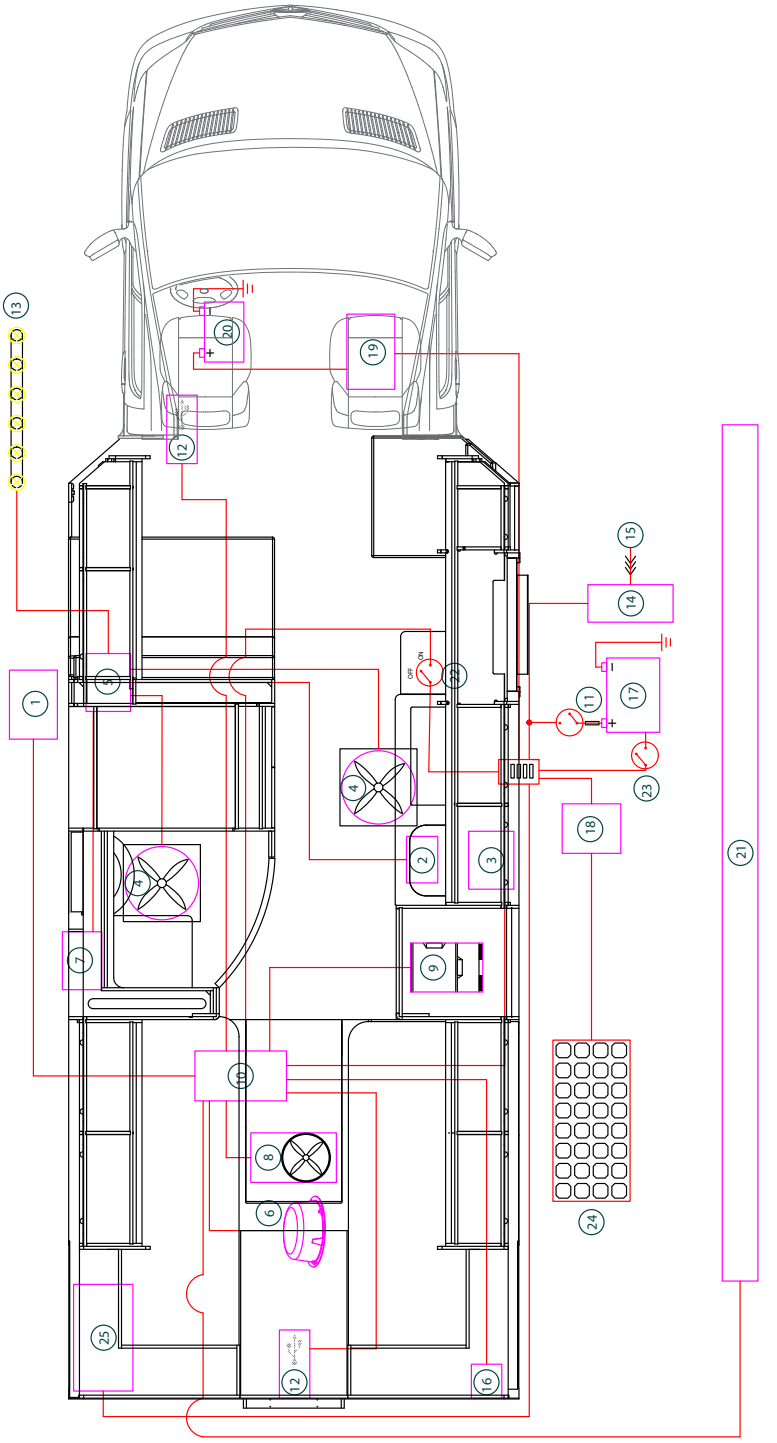

① Macerator Pump (Optional)
② Water Pump
③ Water Heater
④ Power Roof Vent (Washroom/Galley)
⑤ Multiplex System
⑥ Winegard LP Antenna
⑦ Macerator Toilet
⑧ Furnace
⑨ Fridge
⑩ DC Fuse Panel
⑪ Battery Storage Switch
⑫ USB Chargers
⑬ Light Circuits
⑭ Inverter
⑮ 120V AC Power Input
⑯ 12v Garage Plug (20A)
⑰ RV Batteries
⑱ Solar Charge Controller
⑲ DC/DC Charger
⑳ Chassis Battery
㉑ Awning
㉒ Battery Disconnect
㉓ Lithium Battery Heat Enable Switch
㉔ Solar Panels (200W or 400W Optional)
㉕ Generator (Optional)

120 VOLT ELECTRICAL REFERENCE

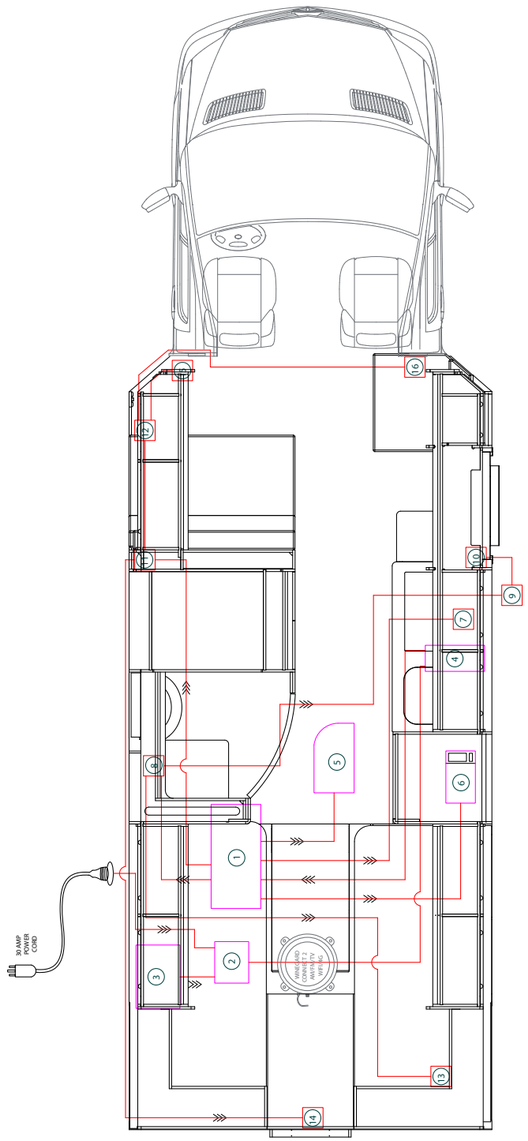

① AC Distribution Panel
② Transfer Switch/Surge Protector
③ Generator
④ Inverter/Charger
⑤ Air Conditioner
⑥ Microwave
⑦ Induction Cooktop Receptacle
⑧ Washroom Receptacle
⑨ Exterior Receptacle
⑩ Galley Receptacle
⑪ TV/Soundbar
⑫ O/H Entertainment Receptacle
⑬ Garage
⑭ Bed
⑮ D.S. Front Dinette Receptacle
⑯ P.S. Front Dinette Receptacle

ELECTRICAL SCHEMATIC

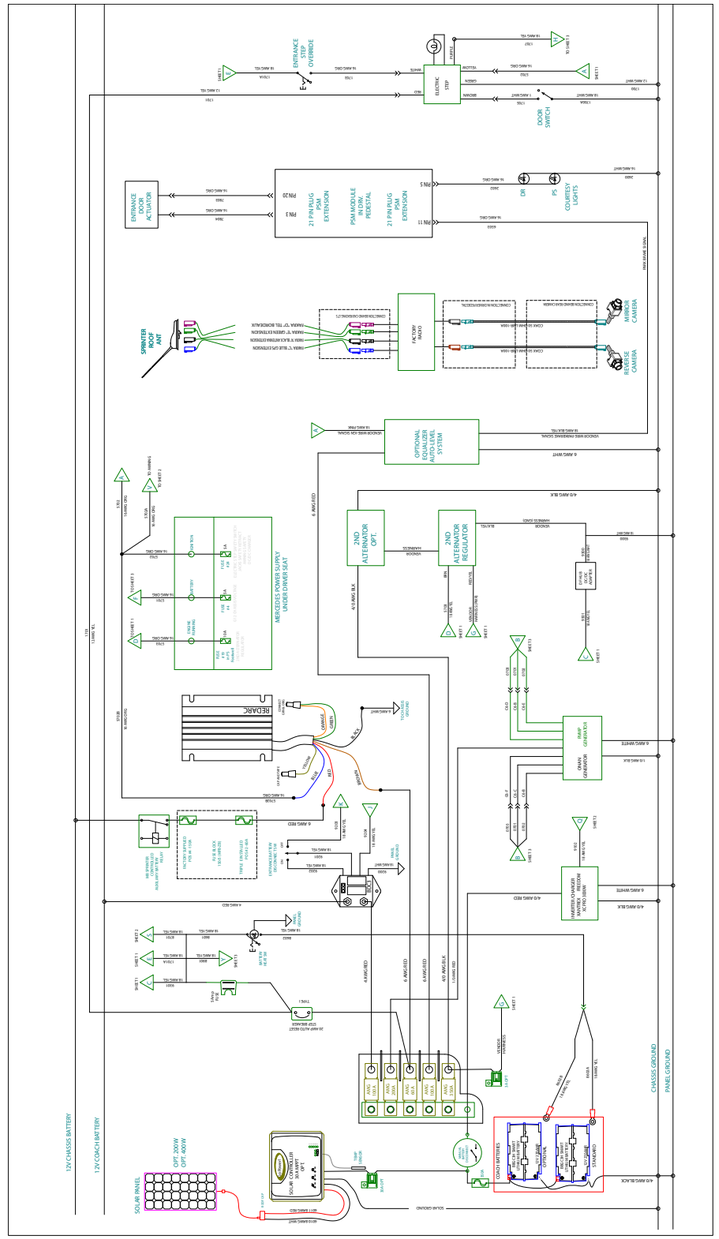

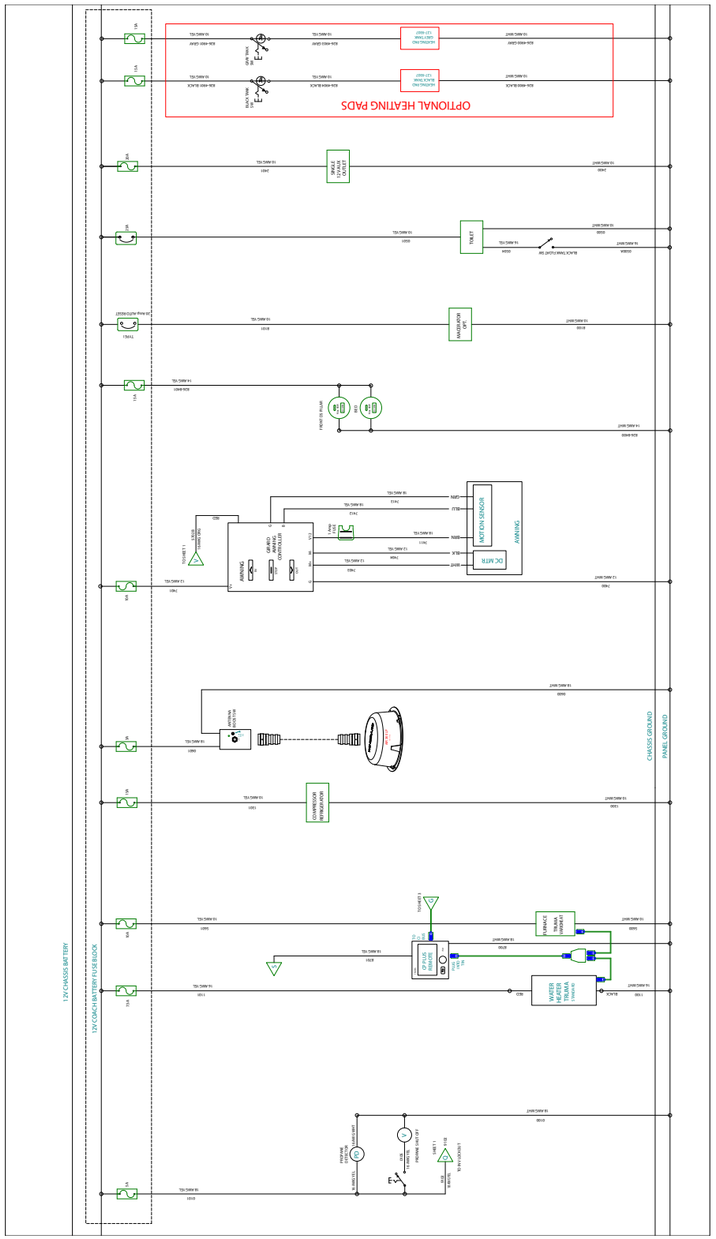
OPTIONAL HEATING PADS
12V CHASSIS BATTERY
12V COACH BATTERY FUSE BLOCK
CHASSIS GROUND
PANEL GROUND
SLIDEOUT
AWNING
FURNACE
WATER HEATER
AC
ENTRY LIGHT
SLIDE MOTOR
AWNING MOTOR
SLIDE SENSOR
AWNING SENSOR
SLIDE SWITCH
AWNING SWITCH
SLIDE MOTOR RELAY
AWNING MOTOR RELAY
SLIDE SENSOR RELAY
AWNING SENSOR RELAY
SLIDE SWITCH RELAY
AWNING SWITCH RELAY
SLIDE MOTOR FUSE
AWNING MOTOR FUSE
SLIDE SENSOR FUSE
AWNING SENSOR FUSE
SLIDE SWITCH FUSE
AWNING SWITCH FUSE

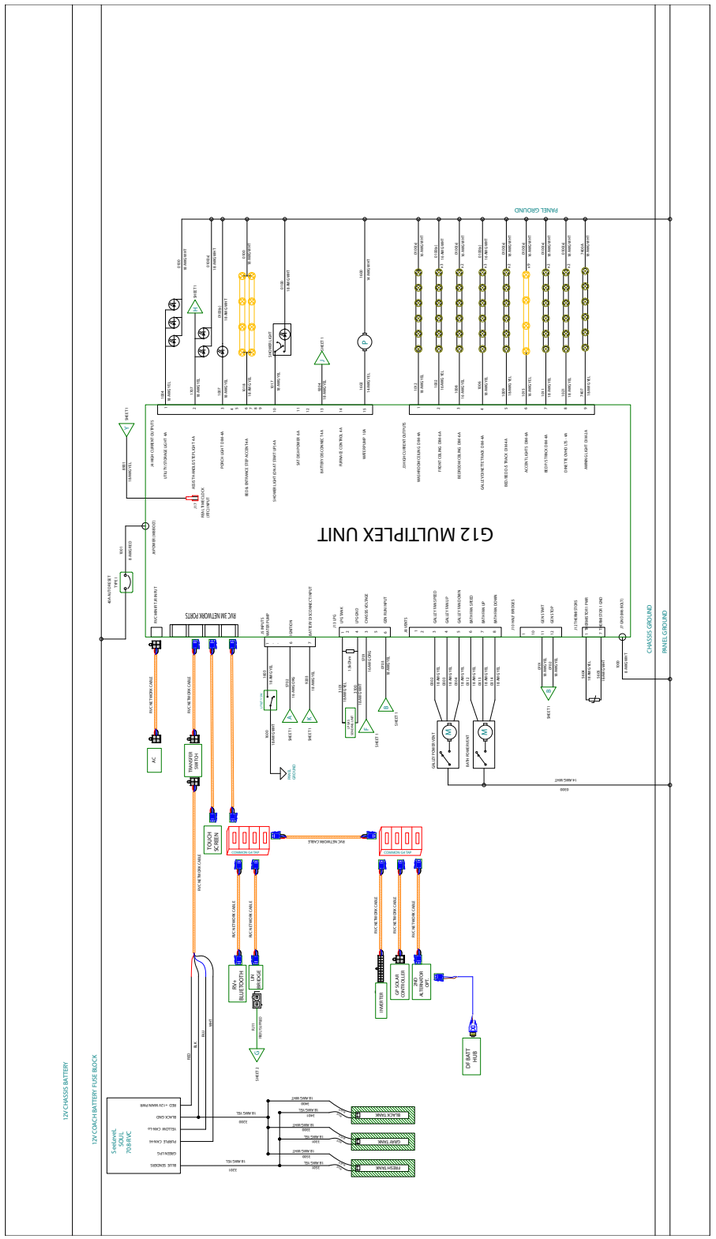
PANEL G/ACK/RD
G12 MULTIPLEX UNIT
PDC 34 NETWORK PORTS
PDC NETWORK CABLE
TOUCH SCREEN
12V CHASSIS BATTERY FUSE BLOCK
CHASSIS GROUND
PANEL GROUND
AC
TRANSFER SWITCH
SLIDE MOTOR
AWNING MOTOR
SLIDE SENSOR
AWNING SENSOR
SLIDE SWITCH
AWNING SWITCH
SLIDE MOTOR RELAY
AWNING MOTOR RELAY
SLIDE SENSOR RELAY
AWNING SENSOR RELAY
SLIDE SWITCH RELAY
AWNING SWITCH RELAY
SLIDE MOTOR FUSE
AWNING MOTOR FUSE
SLIDE SENSOR FUSE
AWNING SENSOR FUSE
SLIDE SWITCH FUSE
AWNING SWITCH FUSE

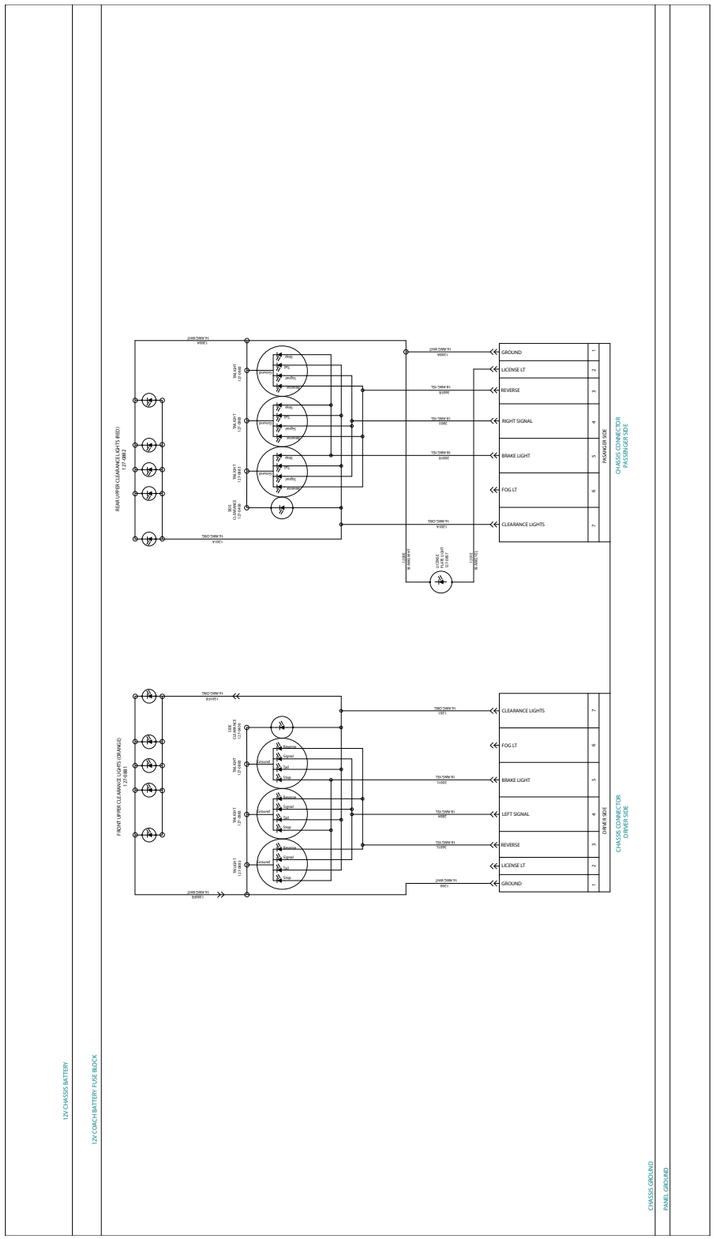
GROUND
LICENSE LT
REVERSE
RIGHT SIGNAL
BRAKE LIGHT
FOG LT
CLEARANCE LIGHTS
CHASSIS CONNECTOR PASSENGER SIDE
CLEARANCE LIGHTS
FOG LT
BRAKE LIGHT
LEFT SIGNAL
REVERSE
LICENSE LT
GROUND
CHASSIS CONNECTOR DRIVER SIDE
12V CHASSIS BATTERY
12V COACH BATTERY FUSE BLOCK
CHASSIS GROUND
PANEL GROUND

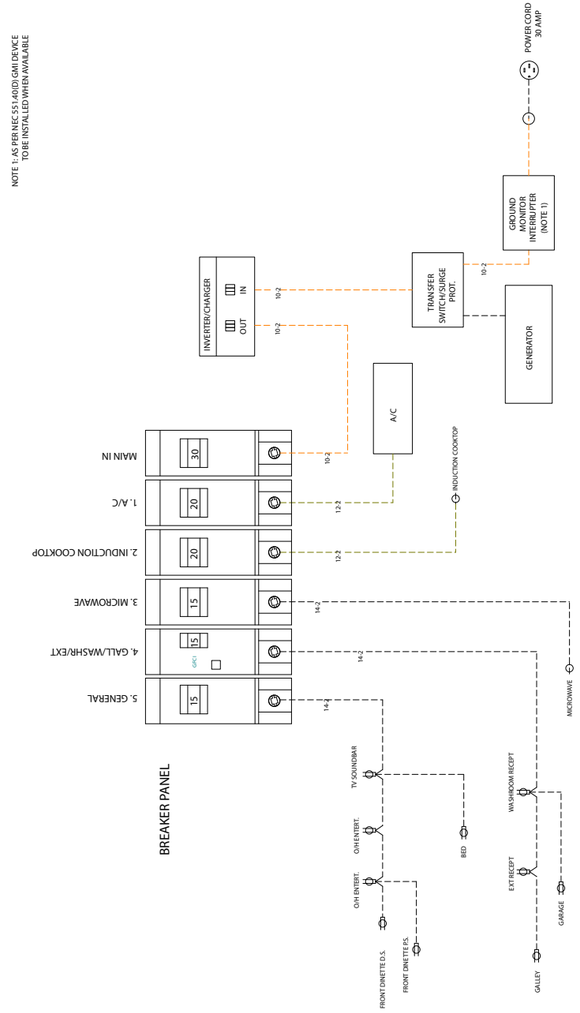
NOTE 1: AS PER NEC 551.40(D) GMI DEVICE TO BE INSTALLED WHEN AVAILABLE
POWER CORD 30 AMP
GROUND MONITOR INTERRUPTER (NOTE 1)
TRANSFER SWITCH/SURGE PROT.
GENERATOR
INVERTER/CHARGER
IN
OUT
A/C
INDUCTION COOKTOP
MAIN IN
1. A/C
2. INDUCTION COOKTOP
3. MICROWAVE
4. GALL/WASHR/EXT
5. GENERAL
BREAKER PANEL
MICROWAVE
TV SOUNDBAR
O/H ENTERT.
O/H ENTERT.
BED
WASHROOM RECEPT
EXT RECEPT
GARAGE
GALLEY
FRONT DINETTE D.S.
FRONT DINETTE P.S.

PLUMBING

WATER LINES SCHEMATIC

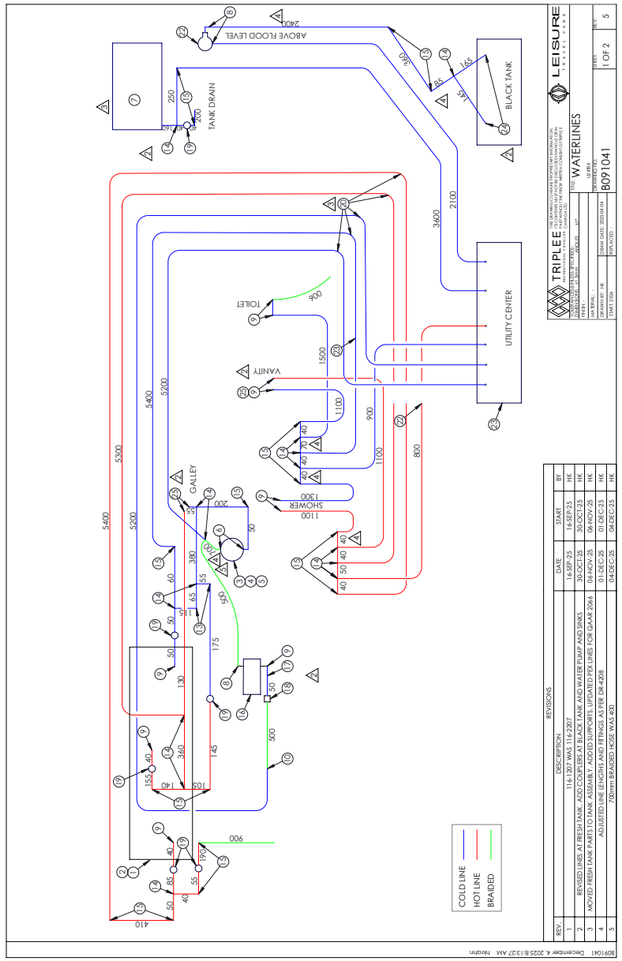

DRAIN LINE SCHEMATIC

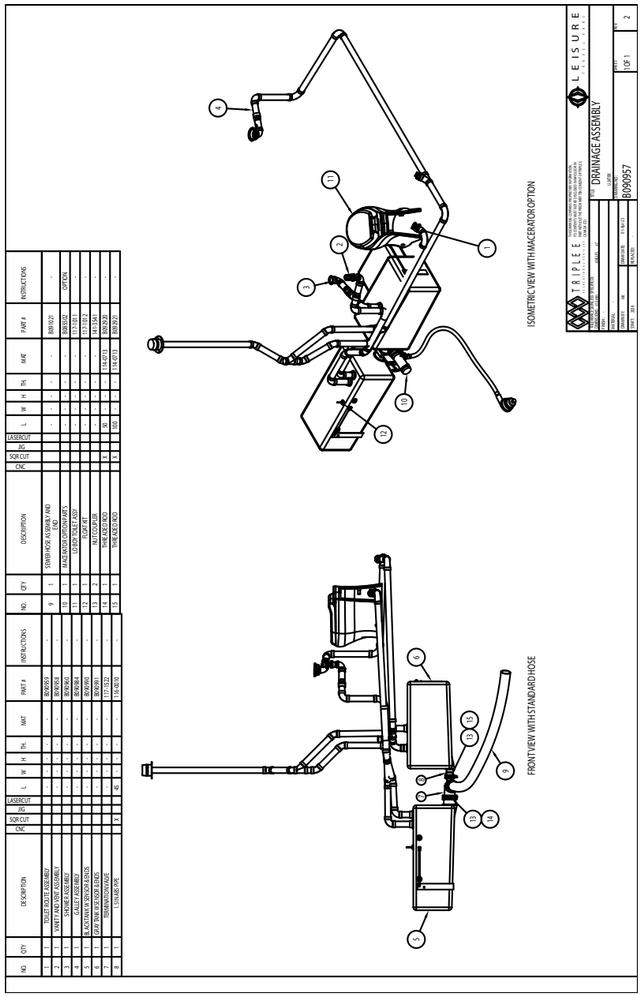

ENTERTAINMENT

U24TB			
NO.	QTY.	PART NO.	DESCRIPTION
1	REF	137-7710	WINEGARD AIR 360° LP
2	REF	126-0691	ANTENNA SWITCH
3	REF	126-2306	EXT. CABLE OUTLET
4	REF	108-1518	JBL SOUNDBAR
5	1	108-0252	90° SIDE HDMI ADAPTER LEFT
6	1	108-1388	COAX 90° ADAPTER
7	1	108-0273	1/2 TNN OPTICAL CABLE
8	1	108-0251	15' HDMI CABLE FRONT TV
9	1	126-1019	COAX INSERT
10	1	126-1015	3 PORT INSERT
11	1	126-6166	RECEPTACLE COVER
12	1	126-1021	HDMI INSERT
13	1	126-1024	BLANK
14	1	B094278	COMPONENT CONN. DECAL

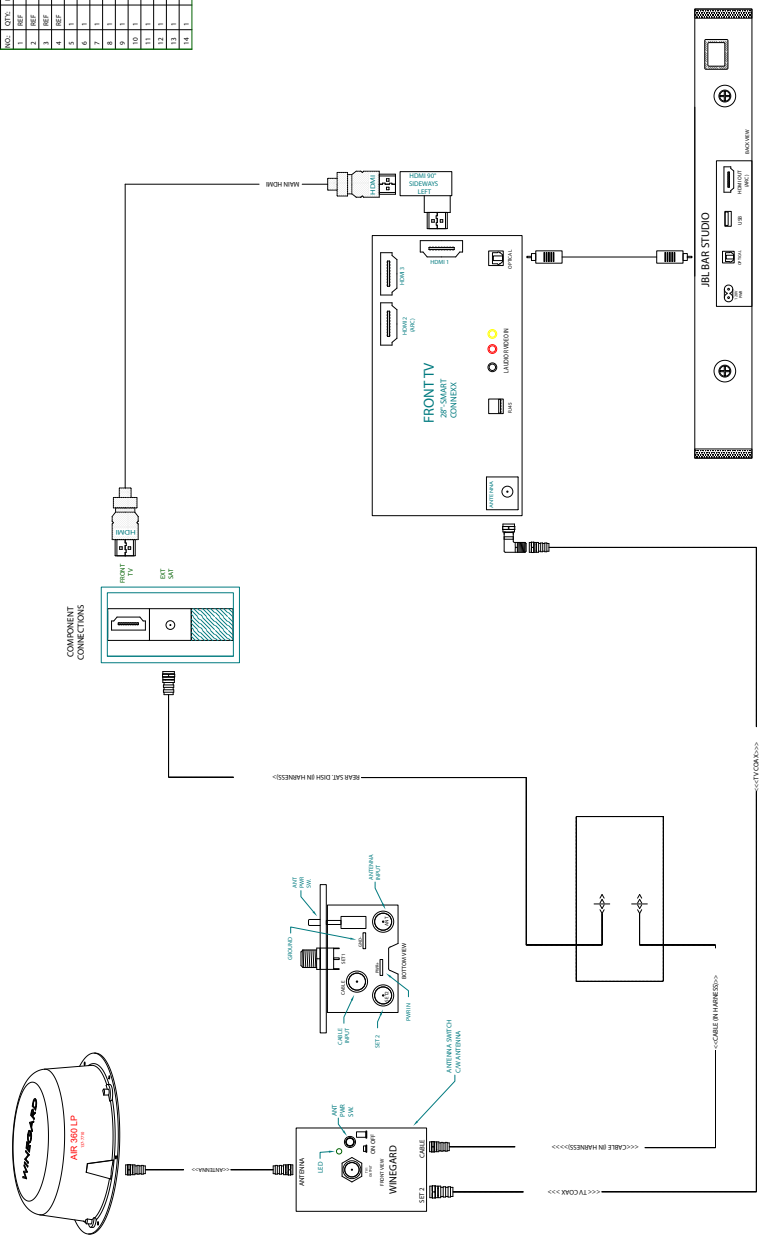

NOTES

NOTES

LEISURE

TRAVEL VANS

LTV Roadside Assistance

4287 Beltline Road, Box #198
Addison, TX 75001

for EMERGENCY ROADSIDE CALL
1•877•219•3831





Triple E Recreational Vehicles and Leisure Travel Vans are brands and trademarks of Triple E Canada Ltd.

301 Roblin Blvd., Box 1230 Winkler, MB Canada R6W 4C4
Telephone: 204-325-4361 Fax: 204-325-5241

US Address: P.O. Box 68 Walhalla, ND 58282

www.tripleerv.com • info@tripleerv.com • www.leisurevans.com • general@leisurevans.com

Product improvement is a continuing process at Triple E Recreational Vehicles.
We reserve the right to change specifications, operating instructions, standards and options on any products without prior notice. The information, illustrations and pictures within this document are current at the time of printing.

Copyright, Triple E Canada Ltd.
146-4613-SEP26

Printed in Canada